NO. REQ. 1

FOR MORE INFO CONTACT:
American Crane & Equipment Corp.
Authorized Distributor
Tel: 877-503-2972
Fax: 484-945-0430
Email: sales@americancrane.com
www.americancrane.com

A	12 1/8″
B	1 3/8″
C	6 7/16″
D	4 1/4″
E	4 1/4″
F	3″
G	8 3/4″
* H	1″
* I	1″

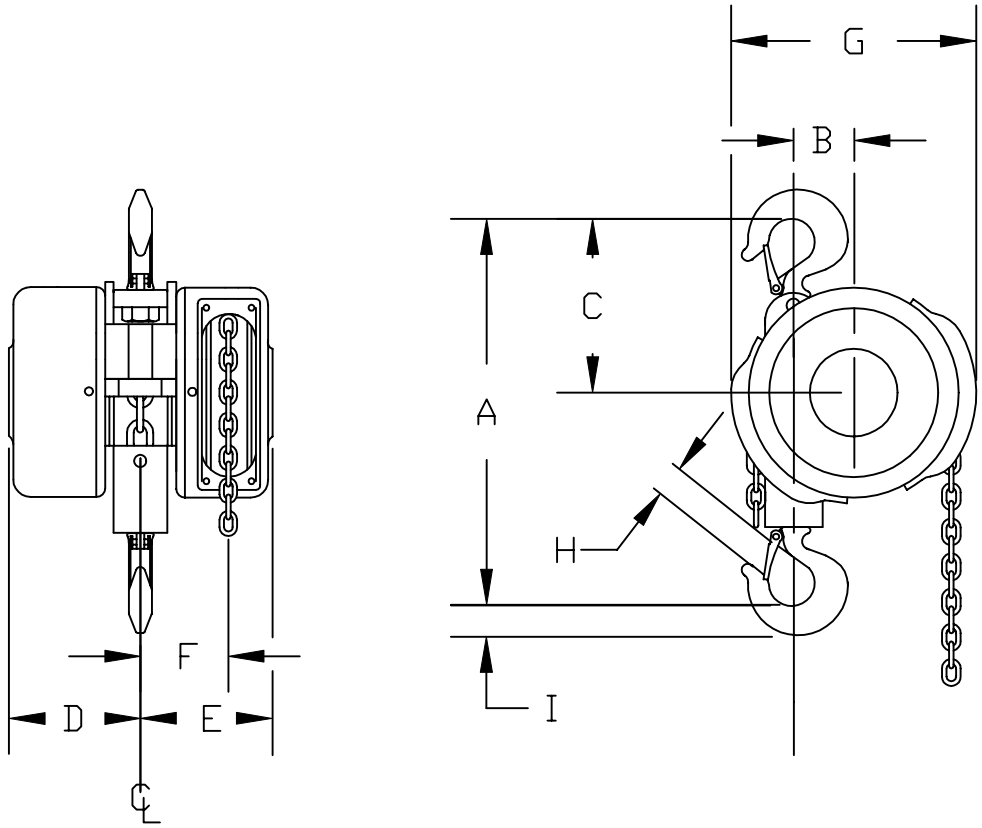

* DIM. FOR TOP & BOTTOM HOOK

MK.	REVISIONS	CK-DATE

1/4 - 1/2 - 1 TON
HOOK SUSPENDED SPUR GEARED HOIST

CHESTER HOIST
LISBON, OHIO

DR. RLB	TR.	CK.	AP.
SCALE NONE		DATE 6-19-00	
REF. DWG. NO. ZSGHS1			
Dwg. No. CD019			