FOR MORE INFO CONTACT: American Crane & Equipment Corp. - Authorized Distributor
Tel: 877-503-2972 Fax: 484-945-0430 Email: sales@americancrane.com Website: www.americancrane.com

CHESTER HOIST

WORM DRIVE HOIST
DATA SHEET E-26AS

CAPACITY 1-1 1/2 TON

LOW HEADROOM
PLAIN TROLLEY TYPE-R

SINGLE HOOK MONORAIL
2-PART DOUBLE

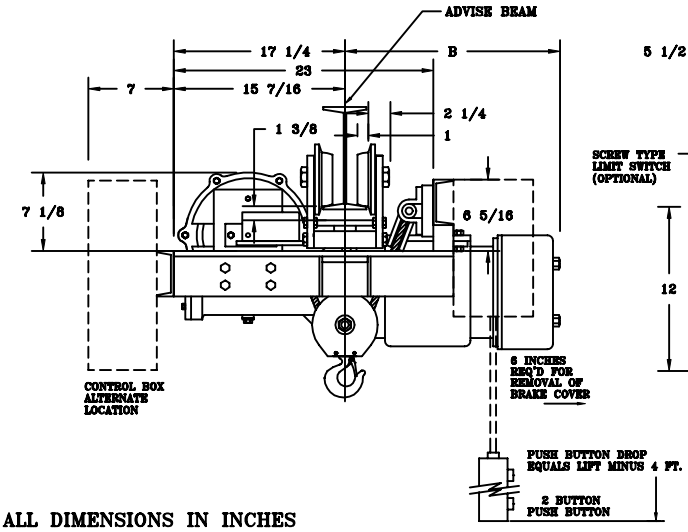

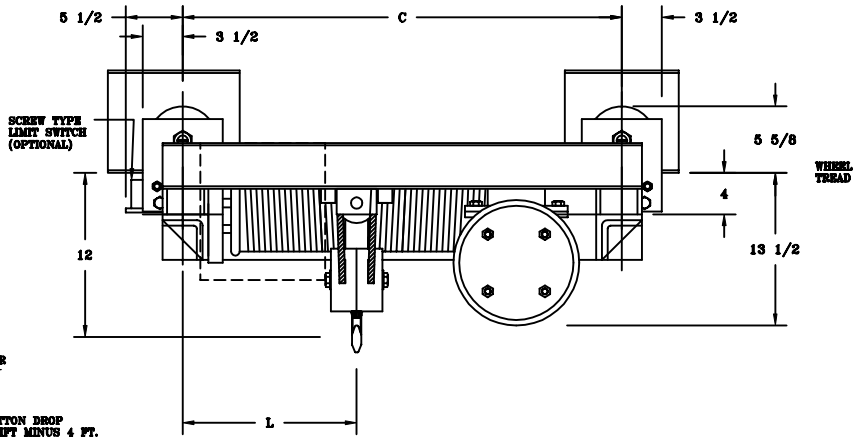

ALL DIMENSIONS IN INCHES

MODEL NUMBER	CAPACITY (lbs.)	SPEED (fpm)	LIFT (ft.)	REEVING	MOTOR (hp)	B	C	L	ST'D. I-BEAM SIZE	ST'D. I-BEAM CLEAR*	APPROX. WT. (lbs.)
WDT-28S	2000	20	16	2PD-1/4	2 @ 1200	19 1/4	36 1/4	12	7-12	7/8	700
WDT-29S	2000	20	26	2PD-1/4	2 @ 1200	19 1/4	42 3/4	15 1/4	7-12	7/8	750
WDT-29AS	2000	20	42	2PD-1/4	2 @ 1200	19 1/4	52 3/4	20 1/4	7-12	7/8	800
WDT-29BS	2000	20	65	2PD-1/4	2 @ 1200	19 1/4	66 3/4	27 1/4	7-12	7/8	850
WDT-21S	2000	30	16	2PD-1/4	3 @ 1800	19 1/4	36 1/4	12	7-12	7/8	700
WDT-22S	2000	30	26	2PD-1/4	3 @ 1800	19 1/4	42 3/4	15 1/4	7-12	7/8	750
WDT-22AS	2000	30	42	2PD-1/4	3 @ 1800	19 1/4	52 3/4	20 1/4	7-12	7/8	800
WDT-22BS	2000	30	65	2PD-1/4	3 @ 1800	19 1/4	66 3/4	27 1/4	7-12	7/8	850
WDT-24S	2000	40	16	2PD-1/4	4 @ 1800	19 1/4	36 1/4	12	7-12	7/8	700
WDT-25S	2000	40	26	2PD-1/4	4 @ 1800	19 1/4	42 3/4	15 1/4	7-12	7/8	750
WDT-25AS	2000	40	42	2PD-1/4	4 @ 1800	19 1/4	52 3/4	20 1/4	7-12	7/8	800
WDT-25BS	2000	40	65	2PD-1/4	4 @ 1800	19 1/4	66 3/4	27 1/4	7-12	7/8	850
WDT-31S	3000	20	16	2PD-1/4	3 @ 1200	19 1/4	36 1/4	12	7-12	7/8	700
WDT-32S	3000	20	26	2PD-1/4	3 @ 1200	19 1/4	42 3/4	15 1/4	7-12	7/8	750
WDT-32AS	3000	20	42	2PD-1/4	3 @ 1200	19 1/4	52 3/4	20 1/4	7-12	7/8	800
WDT-32BS	3000	20	65	2PD-1/4	3 @ 1200	19 1/4	66 3/4	27 1/4	7-12	7/8	850
WDT-34S	3000	30	16	2PD-1/4	5 @ 1800	19 1/4	36 1/4	12	7-12	7/8	700
WDT-35S	3000	30	26	2PD-1/4	5 @ 1800	19 1/4	42 3/4	15 1/4	7-12	7/8	750
WDT-35AS	3000	30	42	2PD-1/4	5 @ 1800	19 1/4	52 3/4	20 1/4	7-12	7/8	800
WDT-35BS	3000	30	65	2PD-1/4	5 @ 1800	19 1/4	66 3/4	27 1/4	7-12	7/8	850
WDT-37S	3000	40	16	2PD-1/4	6 @ 1800	22 1/4	36 1/4	12	7-12	7/8	725
WDT-38S	3000	40	26	2PD-1/4	6 @ 1800	22 1/4	42 3/4	15 1/4	7-12	7/8	775
WDT-38AS	3000	40	42	2PD-1/4	6 @ 1800	22 1/4	52 3/4	20 1/4	7-12	7/8	800
WDT-38BS	3000	40	65	2PD-1/4	6 @ 1800	22 1/4	66 3/4	27 1/4	7-12	7/8	850

* CLEARANCE BASED ON MAX. "S" BEAM SIZE 12" @ 31.8 LBS.
TROLLEYS FOR OTHER I-BEAMS AND PATENTED TRACKS ARE AVAILABLE.
MAXIMUM BEAM FLANGE WIDTH 5 INCHES.
NOTE: WHEN USING SCREW TYPE LIMIT SWITCH ADD 1 INCH TO HEADROOM.